High Voltage DC Contactor
WM680-40

L×W×H(mm): 30×55.8/44/56×30.6mm
30×29.2×30.1mm



A Type



B Type



L Type



PCB Type

- 1 Form A contact arrangement;
- Carrying current 30Acontinuously at 85°C;
- Available shell types available;
- Typical applications:new energy automobile.

Ordering Information

WM680	-40	/450	-12	-A	-B	-R	-P	-S	XXX
1	2	3	4	5	6	7	8	9	10

1 Part number：WM680
2 Contact Current：40: 40A
3 Contact Voltag：450:450VDC
4 Coil rated Voltage(VDC)：12: 12V；24: 24V；48: 48V
5 Contact Form： A: 1 Form A;
6 Coil transient suppression：D: with diode； R: with resistance； Nil: standard
7 Shell Structure：A: A type mounting flange；B: B type mounting flange；L: L type mounting flange；Nil: Without mounting flange
8 Terminals：P: PCB type；Nil: QC type
9 Enclosure：S: Sealed
10 xxx: Customer special code

Contact Data

Contact Form	1A（1 Form A）
Contact Rating (resistive)	40A/450VDC
Max. Breaking Current	50A /450VDC (resistive, 1 cycle.)
Max. Switching Voltage	750VDC
Max. Switching Power	18KW
Contact Resistance or Voltage dro	≤5mΩ（40A）
Current Loading	40A: Continuous; 60A: 60 min; 80A: 20 min; 160A: 30 s
Mechanical Life	2×10^5 cycles
Electrical Life（at 23 °C） 0.6s on 5.4s off	Switch: 1000cycles (40A/450VDC) Switch: 4000cycles (30A/450VDC) Switch: 10000cycles (10A/450VDC) Making:80000cycles (40A/450VDC)

Coil Parameter

Dash numbers	Coil voltage (VDC)		Coil resistance Ω±10%	Pickup voltage VDC (Max.)	Release voltage VDC(Min.)	Coil power	Operate Time	Release Time
	Rated	Max.						
12V	12	15.6	48	9	1	3W	≤30 ms	≤10 ms *1)
24V	24	31.2	192	18	2		≤30 ms	≤15 ms *2)
48V	48	62.4	768	36	4		≤30 ms	≤20 ms *2)

Notes： *1) With resistance + 5ms; With diode + 10ms
*2) With diode + 10ms

Operation condition

Insulation Resistance		1000MΩ Min.（at 500VDC）
Dielectric Strength	Between Contacts	2000VAC / 1 min. （test current：10mA)
	Between Coil and Contacts	3000VAC / 1 min. （test current：10mA)
Ambient Temperature		-40℃ ~ +85℃(Standard); -40℃ ~ +125℃(Special)
Shock resistance	Functional	196m/s^2{20G}
	Destructive	490m/s^2{50
Vibration resistance		10 ~ 500Hz, 49m/s^2 {5G}
Relative Humidit		5% ~ 85%RH
Terminal type		PCB type； QC type
Weight(Approx.)		48g(A type), 50g(L type)

Layout (Unit: mm)

Dimensions / Wiring diagram

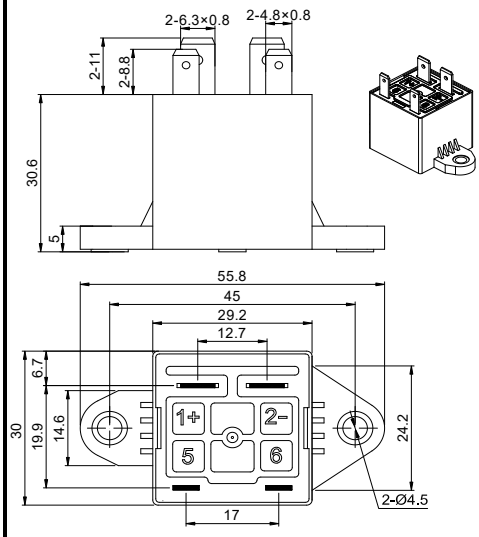

A Type of Shell

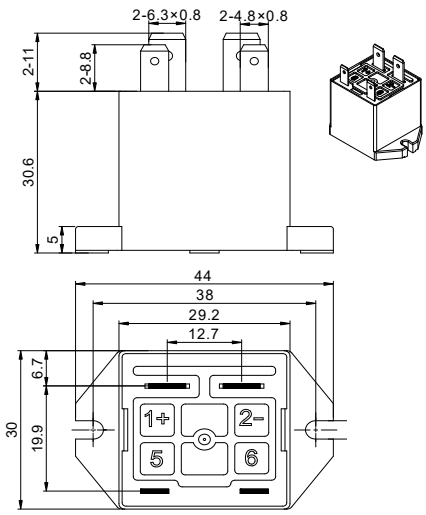

B Type of Shell

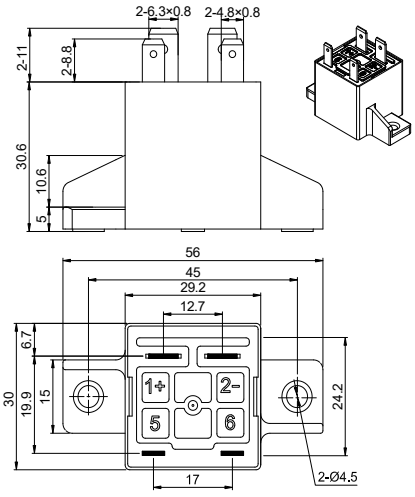

L Type of Shell

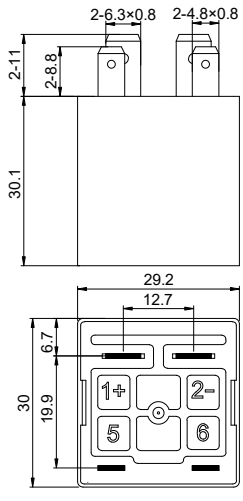

Standard

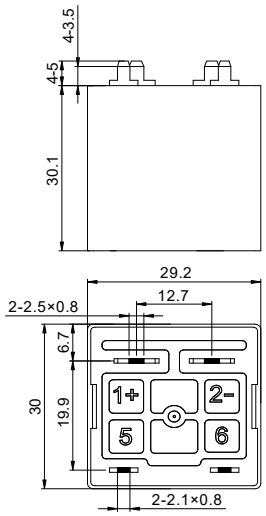

PCB Type

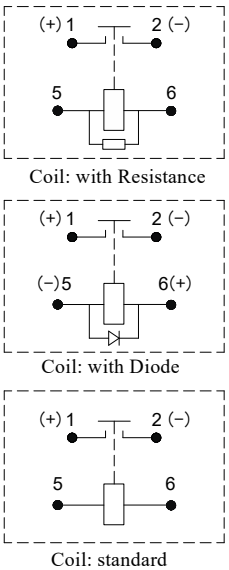

Wiring diagram